Ampco Products, Inc.

Door Machining Sheet

Date:_____
Sheet:____of:____

Customer Name:	Job Name:	Order No.	Core Type: Labeled:	Bevel:

Prefit Door Size: Width_____x Height_____x Thickness_____	Door Skin / Laminate:	Lock Manufacturer:	Lock Model/Funct. No.

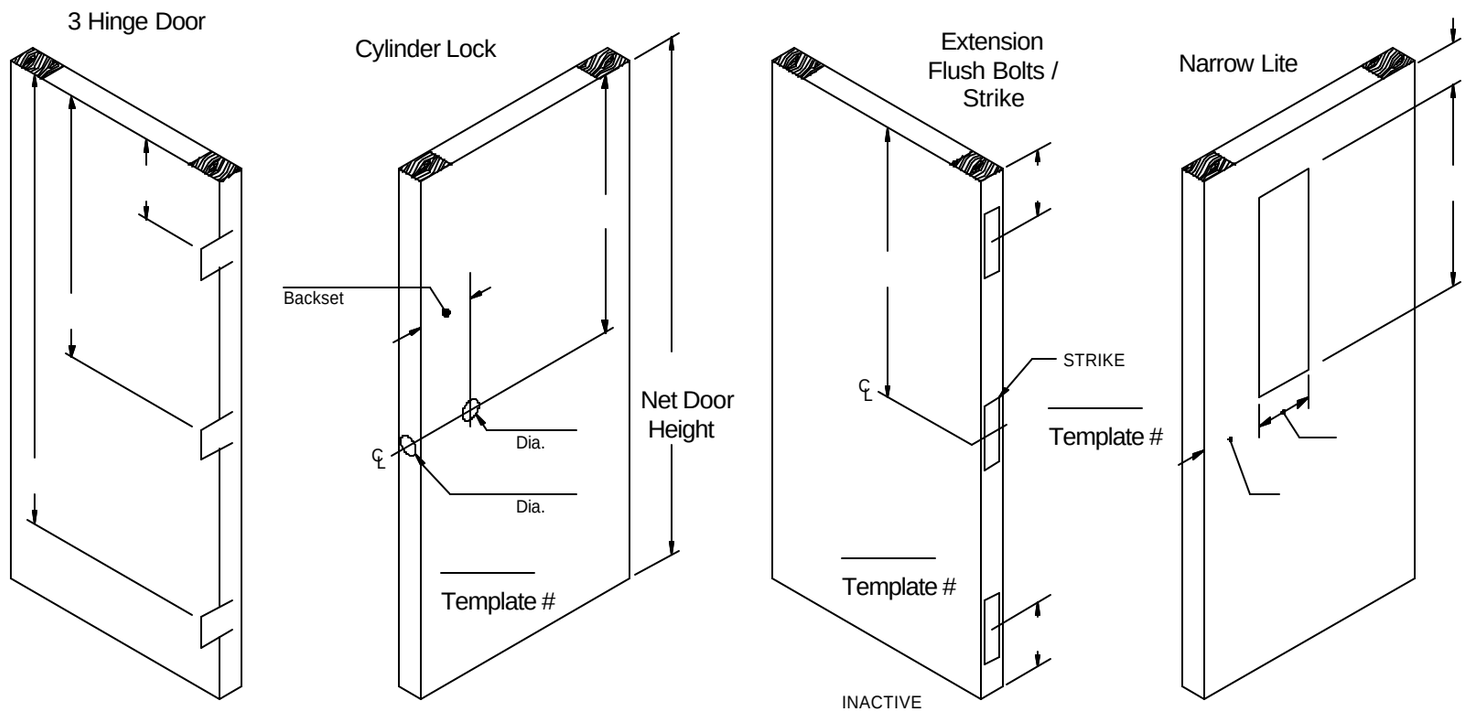

SWING OF DOORS

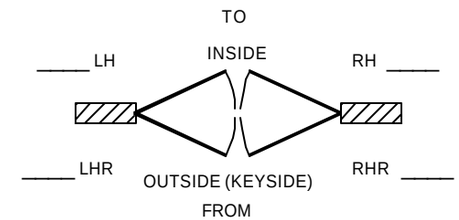

Remarks & Misc. Hdw. Info.

Hinge Set Up

HINGE ROUTING

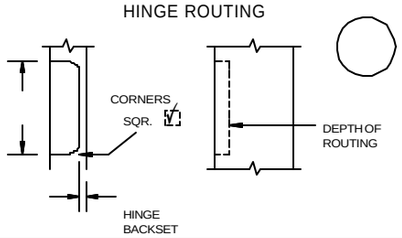

Lock Set Up

LOCK-FACE PLATE ROUTING

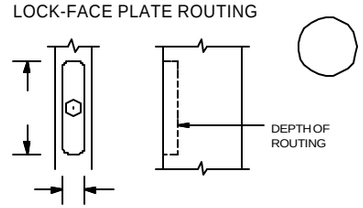

Total No. of Doors (This page):	Packing:

Door No. (Tag)										Swing

	Checked By:	Date:	Issued to Prod.	Sht.	Job No.