Ampco Products, Inc.

Door Machining Sheet

Date:_____
Sheet____of____

Customer Name:	Job Name:	Order No.	Core Type: Labeled:	Bevel:
Prefit Door Size:	Door Skin / Laminate:	Lock Manufacturer:	Lock Model/Funct. No.	

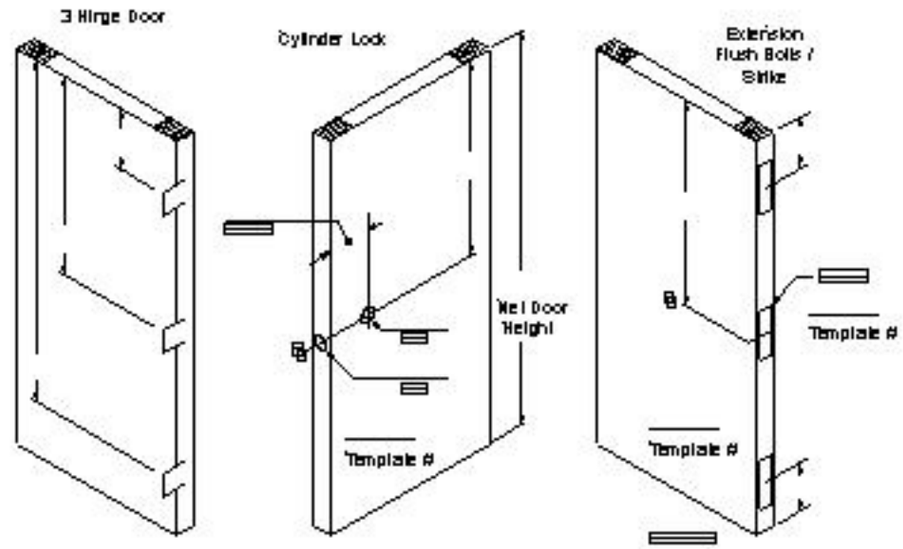

SWING OF DOORS

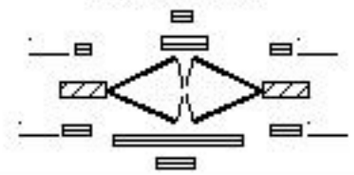

Remarks & Misc. Hdw. Info.

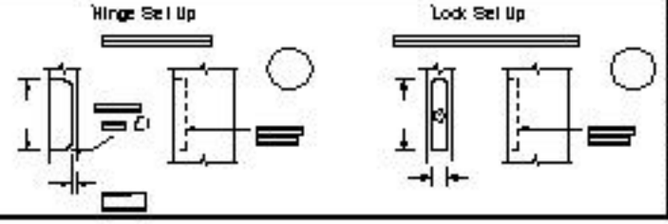

Total No. of Doors (This page):

Packing:

Door No. (Tag)										Swing

Saleem Phundar	Checked By:	Date:	Issued to Prod.	Shi.	Job No.